Exam Date & Time: 12-Dec-2023 (09:30 AM - 12:30 PM)

MANIPAL ACADEMY OF HIGHER EDUCATION

THIRD SEMESTER B.TECH. DEGREE EXAMINATIONS - NOVEMBER / DECEMBER 2023
SUBJECT: ECE 2122- NETWORK ANALYSIS

NETWORK ANALYSIS [ECE 2122]

Marks: 50 **Duration: 180 mins.**

A

Answer all the questions.

Missing data may be suitably assumed.
Do not use Laplace Transform unless specified

1A) For the network shown in the Figure find the voltages V1 and V2. (4)

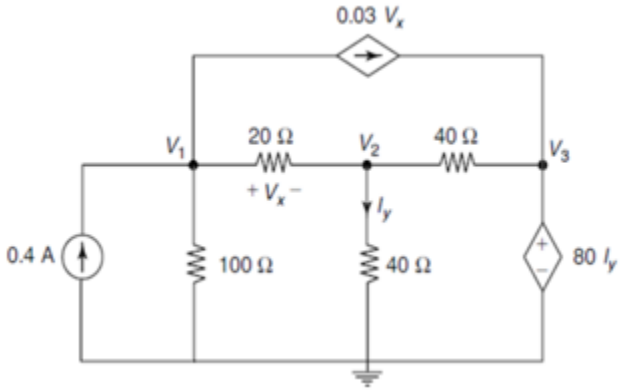

1B) Find the Thevenin equivalent network in the Figure for the terminals A and B. (4)

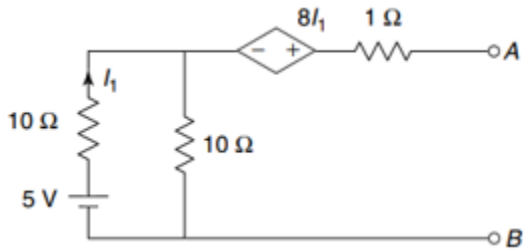

1C) For the circuit shown in the Figure find Ix using Superposition Theorem. (2)

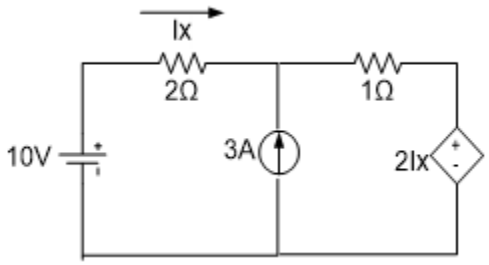

2A) In the network shown in the Figure the switch is closed at t = 0, with zero capacitor (4)

voltage and zero inductor current. Solve for v_1 , v_2 and dv_2 /dt at $t = 0^+$.

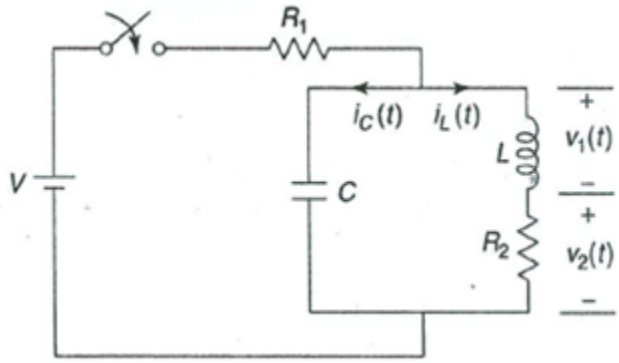

2B) In the network shown in the Figure a steady state is reached with switch open. At t = 0, switch is closed.
Determine $v_a(0^-)$, $v_a(0^+)$, $v_b(0^-)$ and $v_b(0^+)$.

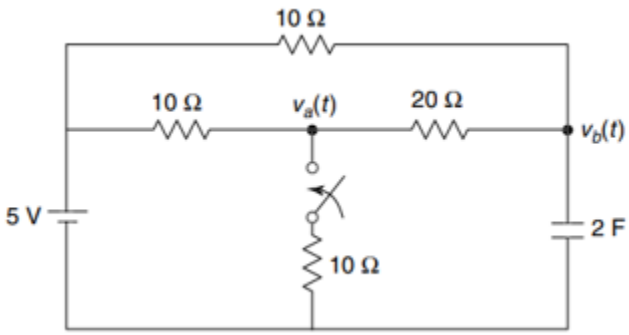

(4)

2C) For the network shown in the Figure the switch is opened at t = 0. Find V(t) for t > 0.

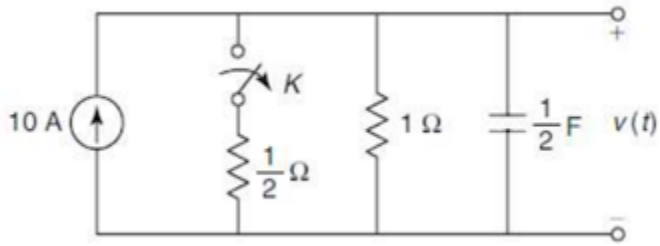

(2)

3A) In the circuit shown in the figure, the switch is closed at t = 0. Assume the initial voltage on the capacitor is 2V and the initial current through the inductor is 3A, determine i(t) for $t \geq 0$ using the Laplace transform.

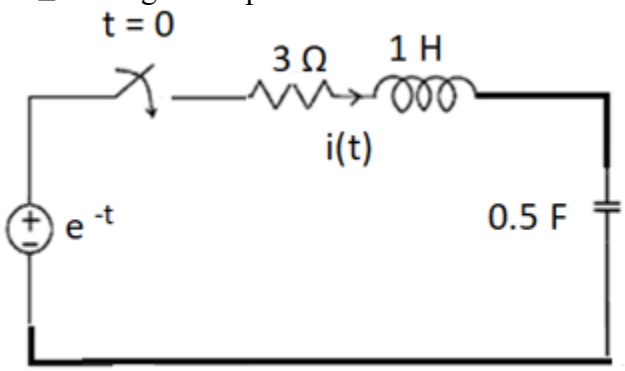

(4)

3B) Use mesh analysis to find $v_o(t) for\ t > 0,$ in the network in shown in figure using (4)

Laplace Transform.

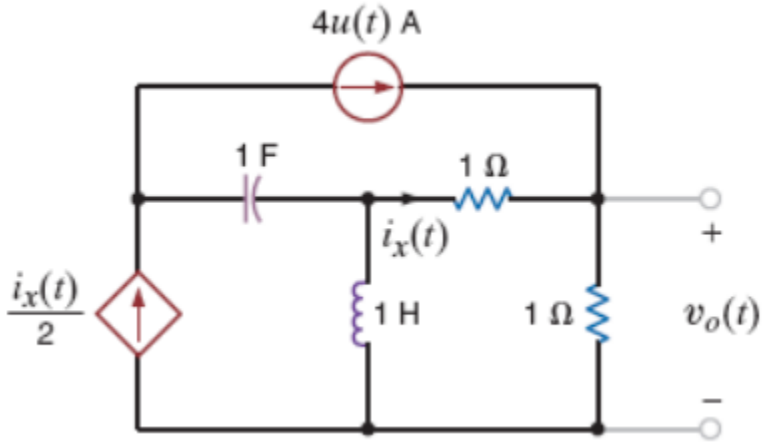

3C) In the circuit shown in figure below switch is moved from 1 to 2 at t = 0, before which steady state has been reached. Find the expression for **v(t)** for t ≥ 0 using Laplace transform.

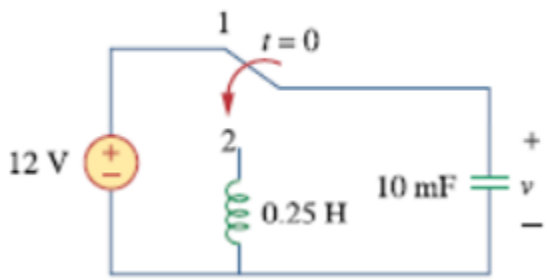

(2)

4A) A symmetrical square wave is applied to a high-pass RC circuit with R = 20k ohm and C = 0.05 uF.
i) If the frequency of the input signal is 1 kHz and the signal swings between ±5V, plot the output waveform and indicate the voltages. (4)
ii) What happens if the frequency of the signal is reduced to 100 Hz? Show the output waveform.

4B) If a square wave of 5 kHz is applied to a high-pass RC circuit and the resultant waveform was measured on CRO was tilted from 15V to 10V, find out the lower 3-dB frequency. (4)

4C) A symmetrical square wave whose peak-to-peak amplitude is 2V and whose average value is zero is applied to an RC integrating circuit . The time constant of the circuit is equal to half of the period of the square wave. Find peak to peak value of the output amplitude. (2)

5A) Determine Y-parameters for the network shown in Figure.

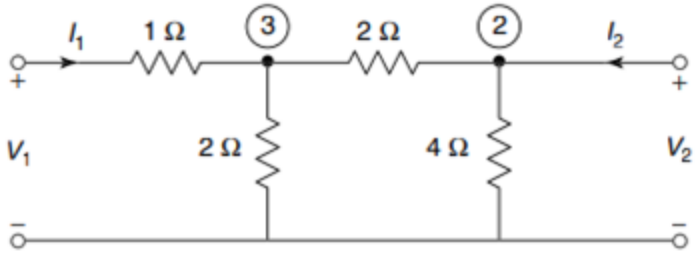

(4)

5B) Find transmission parameters for the two-port network shown in Figure.

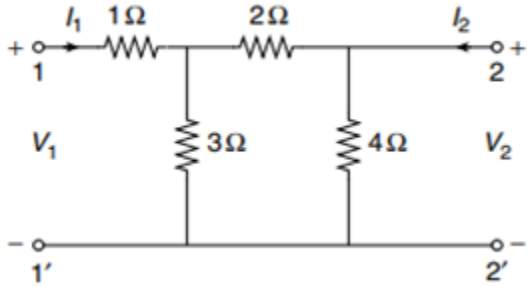

(4)

5C) Derive the expression for h parameters in terms of z parameters. (2)

-----End-----